MLT 1

Multi-Component Gas Analyzer

- Multi-component gas analyzer with up to five components featuring NDIR/UV/VIS photometer, paramagnetic and electrochemical O_2, and thermal conductivity sensors
- Stand-alone or networked analyzer as central interface for multiple analyzer modules
- Tabletop, portable and rack-mountable $^1/_2$ 19" housings with front panel display and keypad
- The Analyzer Module (AM) is a blind analysis unit that measures concentrations and other relevant parameters and provides data to the analyzer network
- The AM version can be integrated in an MLT analyzer system or via platform
- Sheet metal, tabletop or rack-mountable AMs
- Foundation fieldbus connectivity and NGA or XTR WinControl data acquisition

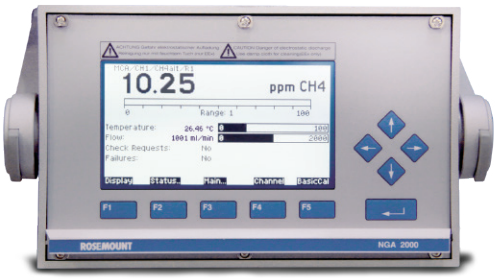

XTR WinControl

MLT 1 Multi-Component Gas Analyzer

Applications

- Internal combustion engine emissions
- Engines and exhaust gas catalyst development
- Continuous emissions monitoring
- Control of denitrification and desulphurization equipment
- Trace monitoring in gas purity and air separation measurements

Worldwide Approvals

CE, CSA-C/US and C-Tick approvals allow global installation of MLT 1 gas analyzers.

Features

- Multi-component analyzer with multi-channel capability
- NDIR: Microflow sensor or solid-state detector
- NDUV/VIS: Semiconductor detector or vacuum diode
- O_2: Fast response paramagnetic or long-term stable electrochemical oxygen sensor
- TC: Thermal conductivity cell
- Four ranges per channel
- Dynamic autoranging ratio 1:10 or more (up to 1:250)
- AK protocol for automotive
- Autocalibration via internal or external valve block controlled by digital I/O, serial interface, network, time-programmed
- Zero and span stability by autozero and automatic gain control without span gas
- Barometric or process pressure compensation
- Sample flow rate measurement
- Analog, digital and serial I/Os (SIO/DIO)

Process-approved Sensors

Solvent-resistant, corrosion-resistant and intrinsically safe measuring cells and stainless steel tubing are available

ROSEMOUNT® Analytical

EMERSON™ Process Management

Specifications

Please contact your Emerson representative if your requirements are outside the specifications listed below. Improved performance, other products and material offerings may be available depending on the application.

Table 1 - Gases and Measuring Ranges

Gas Components		Minimum Ranges	Maximum Ranges
Ammonia	NH_3	0–300 ppm	0–100 %
Carbon dioxide	CO_2	0–5 ppm (2)	0–100 %
Carbon monoxide	CO	0–10 ppm (2)	0–100 %
Hexane	C_6H_{14}	0–100 ppm	0–10 %
Methane	CH_4	0–100 ppm	0–100 %
Nitric oxide	NO	0–250 ppm	0–100 %
Nitrous oxide	N_2O	0–200 ppm	0–60%
Oxygen	O_2	0–1 % (2)	0–100 % (3)
Sulphur dioxide	SO_2	0–130 ppm	0–80 %
Sulphur hexafluoride	SF_6	0–20 ppm	0–2 %
Water vapor (1)	H_2O	0–1,000 ppm	0–3 %

(1) Dew point must not exceed ambient temperature
(2) Non-standard specifications (CO/CO_2)
(3) pO_2 only; eO_2 up to 25 %, higher concentrations reduce sensor lifetime

Table 2 - MLT 1 Electrical Specifications

Input	Three-pole XLR flange (male), lockable
Voltage Supply	24V DC ± 5 %/3 A
For AC operation (120/230 V)	The DC supply must be provided by including one of the following options: UPS, SL 5/SL 10 (for cabinet mounting only) or equivalent power supply.

Table 3 - UPS/SL5, SL10 Specifications (Cabinets Only)

Input UPS/SL 5, SL 10	IEC appliance inlet/terminals
Voltage Supply	120/230V AC, 50/60 Hz
Input voltage UPS/SL 5, SL 10	93–132V AC resp. 196–264V AC, 47–63 Hz autoranging/manual switch
Input current UPS//SL 5//SL 10	2.5/1.5 A//2.6/1.4 A//6.0/2.8 A
Output UPS/SL 5, SL 10	Three pole XLR flange (female)/terminals
Output voltage UPS, SL 5/SL 10	24V DC maximum 5.0 A/maximum 10.0 A
Nominal power UPS, SL 5 SL 10	maximum 120 W maximum 240 W
Dimensions UPS Rack Module SL 5 (SL 10)	19" , 3 HU, 21 DU 125 x 65 (122) x 103 mm (H x W x D)
Installation UPS Rack Module SL 5 (SL 10)	Depth minimum 400 mm (with plug/cable) Mountable on DIN supporting rails type TS 35

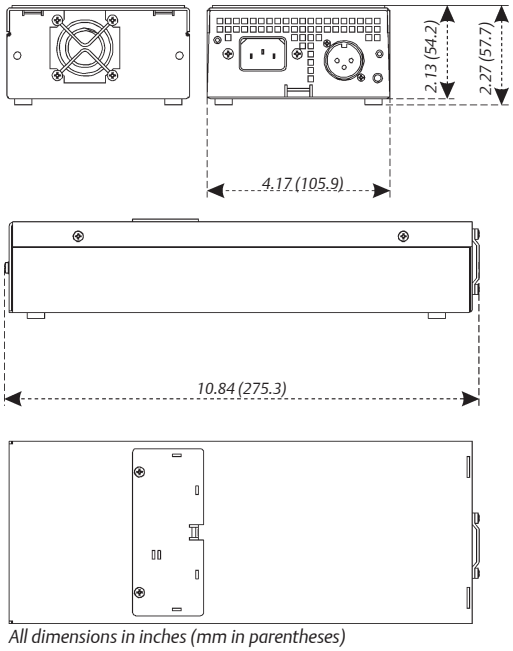

All dimensions in inches (mm in parentheses)

Figure 1 - Mounting dimensions for universal power supply table-top version (without cables)

Table 4 - Performance Specifications

	NDIR/UV/VIS	Oxygen (pO_2 (8)/eO_2 (9))	Thermal Conductivity (TCD)
Detection limit	≤1 % (1) (4)	≤ 1 % (1) (4)	< 1 % (1) (4)
Linearity	≤ 1 % (1) (4)	≤ 1 % (1) (4)	≤ 1 % (1) (4)
Zero-point drift	≤ 2 % per week (1) (4)	≤ 2 % per week (1) (4)	≤ 2 % per week (1) (4)
Span (sensitivity) drift	≤ 0.5 % per week (1) (4)	≤ 2 % per week (1)	≤ 1 % per week (1) (4)
Repeatability	≤ 1 % (1) (4)	≤ 1 % (1) (4)	≤ 1 % (1) (4)
Response time (t_{90}) (3)	3 s < t_{90} < 7 s (5)	< 5 s Approx. 12 s	15 s < t_{90} < 30 s (5)
Permissible gas flow	0.2–1.5 l/min	0.2–1.0 / 0.2–1.5 l/min	0.2–1 l/min ± -0.1 l/min
Influence of gas flow		≤ 2 % (1) (4)	≤ 1 % (1) (4) (13)
Maximum gas pressure	≤ 1,500 hPa abs. (14)	Atm. pressure ≤ 1,500 hPa abs. (14)	≤ 1,500 hPa abs. (14)
Influence of pressure - At constant temperature - With pressure compensation (10)	≤ 0.1 % per hPa (2) ≤ 0.01 % per hPa (2)	≤ 0.1 % per hPa (2) ≤ 0.01 % per hPa (2)	≤ 0.1 % per hPa (2) ≤ 0.01 % per hPa (2)
Permissible ambient temperature	+5 °C to +40 °C (7)	+5 °C to +40 °C (7)	+5 °C to +40 °C (10)
Influence of temperature - On zero point - On span (sensitivity)	≤ 1 % per 10 K (1) ≤ 1 % per 10 K (1) ≤ 5 % (+5 to +40 °C) (1) (6)	≤ 1 % per 10 K (1) ≤ 1 % per 10 K (1)	≤ 1 % per 10 K in 1 h (1) ≤ 1 % per 10 K in 1 h (1)
Thermostat control	None	Approx. 55 °C (8) / None	Approx. 75 °C (11)
Warm-up time	Approx. 15 to 50 minutes (5)	Approx. 50 minutes (9)	Approx. 15 minutes

(1) Related to full scale at system parameter END = factory setting and OFS = 0
(2) Related to measuring value
(3) From gas analyzer inlet at gas flow of 1.0 l/min (eletr. = 2 s)
(4) Constant pressure and temperature
(5) Dependent on integrated photometer bench/sensor
(6) Starting from 20 °C to (+5 °C or to +40 °C)
(7) Higher ambient temperatures (45 °C) on request
(8) Thermoelectrically controlled pO_2 cell
(9) Not for use with sample gas containing FCHC's
(10) Pressure sensor required
(11) Measuring cell only
(12) Dependend on measurement range
(13) Flow constant within ± 0.1 l/min
(14) At normal atmospheric pressure (1013 hPa)

Performance Specifications

Compliances	EN 61326, EN 61010, NAMUR, PAC, C–TICK CSA–C/US, GOST: VNIIMS, Pattern (Belarussia)
Suitability tests	TÜV Rheinland: $CO/SO_2/NO/O_2$ measurement acc. to TI Air (Technical Instruction on Air Quality Control) and 13th BImSchV (Large Furnaces order) TÜV Nord: FDA test: 0–10 ppm CO and 0–5 ppm CO_2
Measuring components	Approx. 60 gases are detectable, e.g.: NO, NO_2, SO_2, CO, CO_2, CH_4, C_6H_{14}, SF_6, H_2O, N_2O, O_2, NH_3, R134a, H_2 etc.
Gas connection for sample, reference or purge gas	Maximum 8 fittings 6/4 mm PVDF Option: 6/4 mm ss, 1/4" ss; for more options c.f
Protection class of enclosure	IP20 according to IEC 60529: General purpose for installation in weather protected area
Permissible humidity (non-condensing)	< 90 % rel. humidity at 20 °C (68 °F) < 70 % rel. humidity at 40 °C (104 °F)
Weight	Approx. 8–13 kg, depending on configuration

Signal Outputs, Interface

SIO and DIO (Options)

2–8 analog signal outputs
(SIO, optically isolated, sub-modular structure):
- 0–10 V and 0–20 mA
  (R_B ≤ 500 Ω)
- 2–10 V and 4–20 mA
  (R_B ≤ 500 Ω)

Three relay contacts (SIO, NAMUR):
- Contact rating: 1 A, 30 V

Serial Interfaces (SIO, option):
- RS 232 C or RS 485

Digital I/Os (DIO, optically isolated, freely programmable from a list of commands)
- 8 digital inputs, 0–30V DC/ 2.2 mA (for remote functions)
- 24 digital outputs, 5–30V DC/500 mA

Network
- FOUNDATION™ fieldbus
- LON (analyzer network)

For full technical specifications of I/Os, please refer to Input / Output data sheet.

Dimensions

The drawings below represent the minimum recommended installation guidelines for the MLT 1 Multi-Component Gas Analyzer. Please contact your Emerson representative for detailed installation recommendation of your application.

Figure 1 - Analyzer/Analyzer Module for Rack Mounting/Table-top

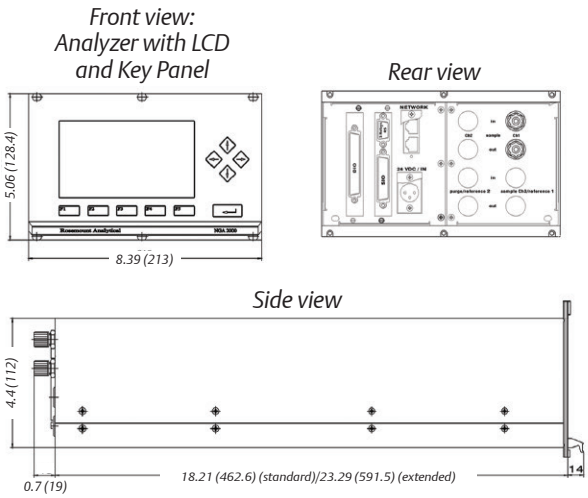

Figure 2 - Sheet Metal Analyzer Module for Platform or External Mounting

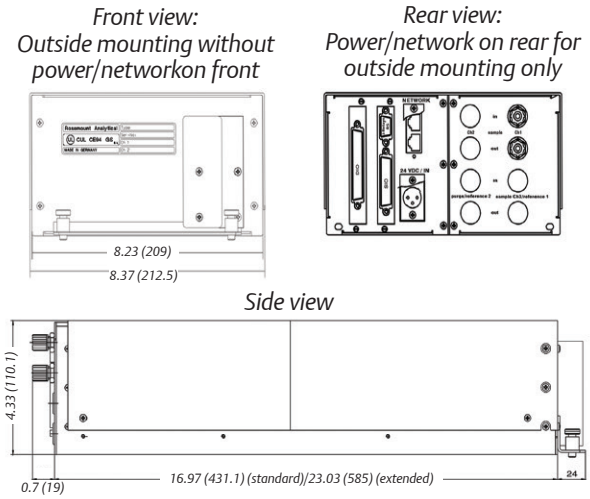

All dimensions in inches (mm in parentheses)

www.RosemountAnalytical.com

www.analyticexpert.com
www.twitter.com/RAIhome
www.youtube.com/user/RosemountAnalytical
www.facebook.com/EmersonRosemountAnalytical

EUROPE

Emerson Process Management
GmbH & Co. OHG
Rosemount Analytical
Analytical Center of Excellence
Industriestrasse 1
63594 Hasselroth, Germany
T +49 6055 884 0
F +49 6055 884 209
pga.info@emerson.com

ASIA-PACIFIC

Emerson Process Management
Asia Pacific Private Limited
1 Pandan Crescent
Singapore 128461
Republic of Singapore
T +65 6 777 8211
F +65 6 777 0947
analytical@ap.emersonprocess.com

MIDDLE EAST AND AFRICA

Emerson Process Management
Emerson FZE
P.O Box 17033
Jebel Ali Free Zone
Dubai, United Arab Emirates
T +971 4 811 8100
F +971 4 886 5465
analytical@ap.emersonprocess.com

AMERICAS

Emerson Process Management
Rosemount Analytical
Analytical Center of Excellence
10241 West Little York, Suite 200
Houston, TX 77040 USA
Toll Free 866 422 3683
T +1 713 396 8880 (North America)
T +1 713 396 8759 (Latin America)
F +1 713 466 8175
gc.csc@emerson.com

ROSEMOUNT® Analytical

EMERSON™ Process Management